3D Scanning | Reverse Engineering | Quality Analysis | 3D Services

Wheelchair Manufacturing

www.formeon.co.uk

Formeon

About

What we do

Formeon are 3D scanning experts with experience in a wide range of 3D disciplines from analysis to design. Based in the Midlands, UK, our 3D scanning expertise ranges from inspection and validation to reverse engineering and observation. We work with many sectors including:

- Vehicle after market
- Creative fields
- Manufacturing & Fabrication
- Engineering & Design

Experts in form capture

With handheld, infinitely mobile 3D scanners, we access confined spaces, capturing data beyond arm-based scanners. Our metrology-grade scanners measure points at +/-0.03mm accuracy, with 0.2mm point-to-point distance resolution covering objects 50mm to 4m.

Save engineering resource

Complicated or complex geometry and surfaces are a challenge to measure and reliably recreate by hand

Inspect part quality

From first article inspection to scan-to-CAD likeness reports that reveal if there are any manufacturing defects

Generate editable CAD

Recreating a part's original design intent and a feature tree that can be modified at any stage

Replicate discontinued parts

Remove single-source reliance for one-off parts, obsolete components or custom fabrications

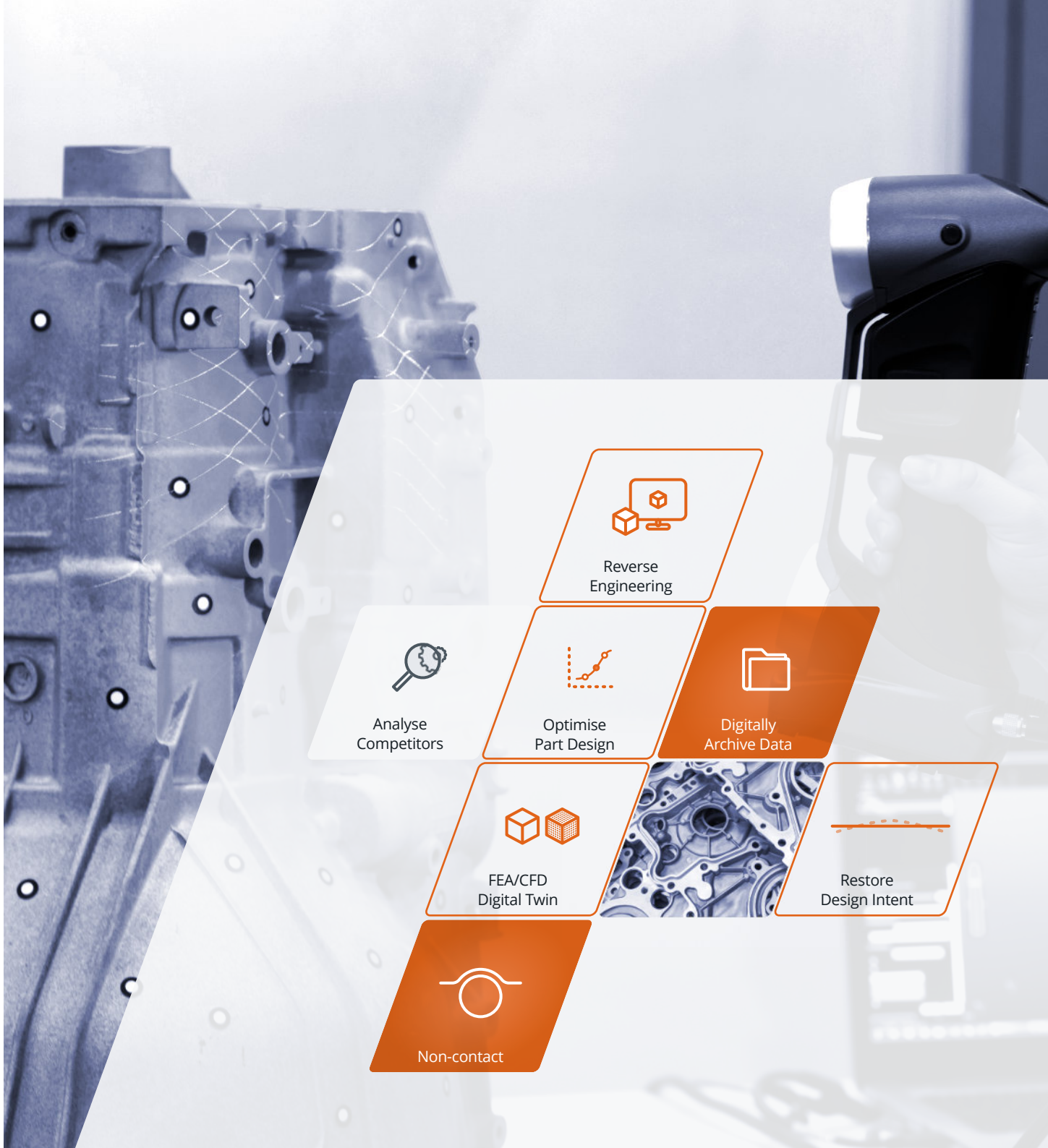

Project 1

Wheelchair Caster Forks

Caster forks on a wheelchair hold and support the front caster wheels, enabling smooth rotation for enhanced wheelchair manoeuvrability and providing stable, easy movement for the user. They are adjustable, sturdy components that play a crucial role in wheelchair functionality.

In this project we explore the benefits and enhancements 3D scanning brings including:

- 3D scan-to-CAD
- Deviance reporting
- Manufacturing drawings
- Design improvements
- Prototyping
- Photorealistic 3D rendering

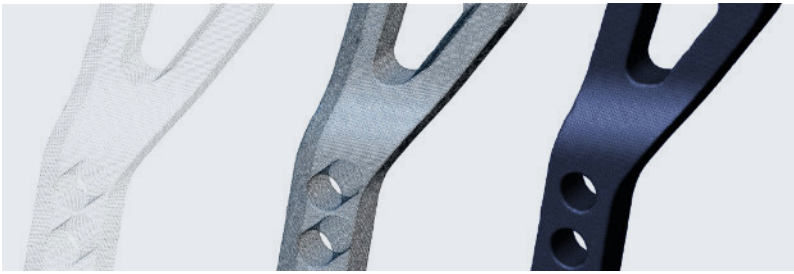

3D Scanning

Capturing 3D data of an existing part

Using our Creaform laser-based 3D scanner we're able to capture the features, details and surfaces of the caster fork in incredible detail. This ensures no features are missed or surface misrepresented.

The scan captured all the necessary details to reverse engineering this part including the dowel diameters, hole locations and thread sizes.

Capturing the data is only part of the story. Utilising the mesh body, we're able to analyse, enhance or re-manufacture parts as if the CAD data had always existed.

Scan Mesh to CAD

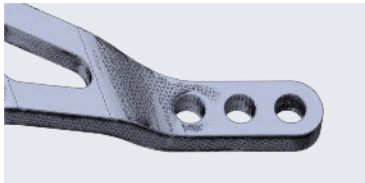

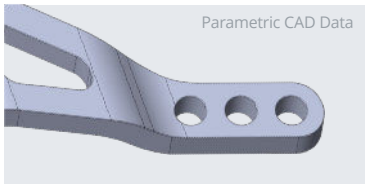

- Sharp edges, flat faces and perfect cylindricity. The newly-generated CAD model features all the editable, geometrically sound features the original part had.

Reverse Engineering

Creating new CAD data from the 3D scan output

Using scan data to reverse engineer a part is faster and more reliable than error-prone, time consuming manual measurement and recreation. We're quickly able to generate usable parametric CAD data for design, development or manufacture.

Using the scan data in this way ensures the often complicated features and complex surfaces are captured and the design intent is then reproduced accurately.

Parametric CAD data

Computer modelling using parameters and constraints to create or modify CAD models based on defined relationships and dimensions.

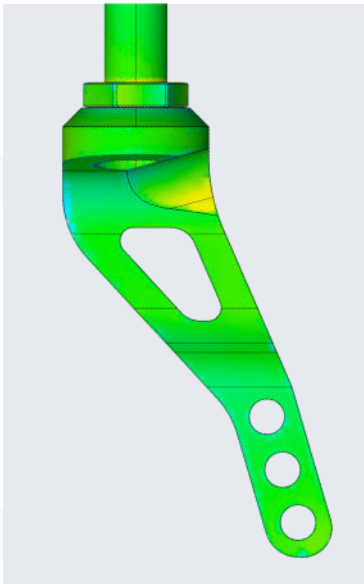

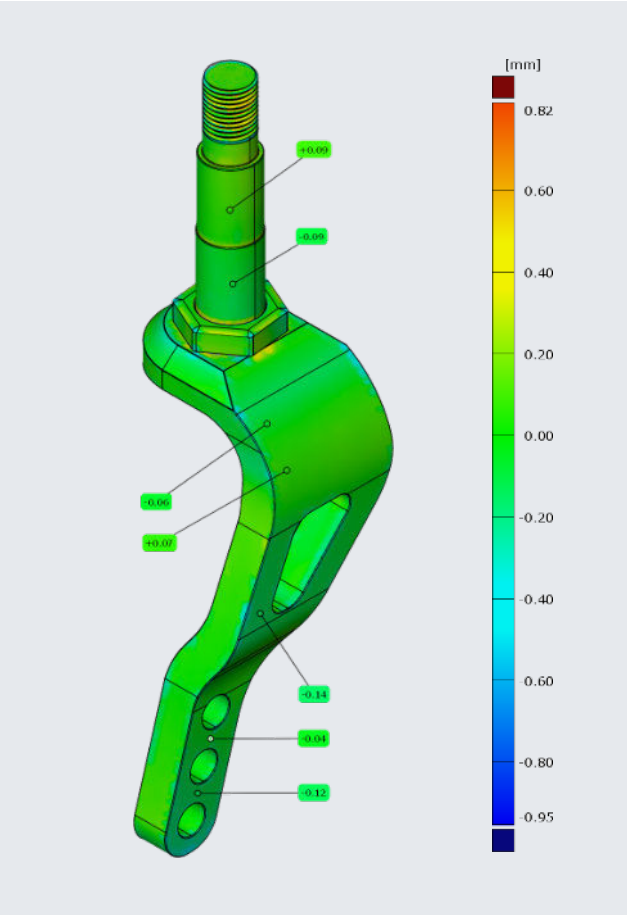

The colour map visualises the deviation from the scan data. From here we would see any wear, warp or damage to the original part and where corrections have been made in the new CAD data.

> Variations in flatness

> Wear on bearing faces

> Damaged edges

Deviation Map

Validating the new CAD data

Creating a deviation map involves comparing the newly-generated data with the scan data to ensure the accuracy of the data created. This process enables the identification of any deviations in a part, allowing for necessary corrections or incorporation into the new model.

Manufacturing Data

Generating manufacturing files to produce new parts

With CAD data now available, tooling can be created, moulds manufactured or CNC toolpaths written in order to turn the CAD data in to a reality.

Manufacturing drawings, GD&T and GAs can be created using the CAD data to facilitate clear communication between manufacturing partners.

> *Empowering manufacturers with cutting-edge 3D scanning solutions, we excel in reverse engineering parts and providing invaluable data for seamless manufacturing data creation.*

Mike Rose
Formeon founder

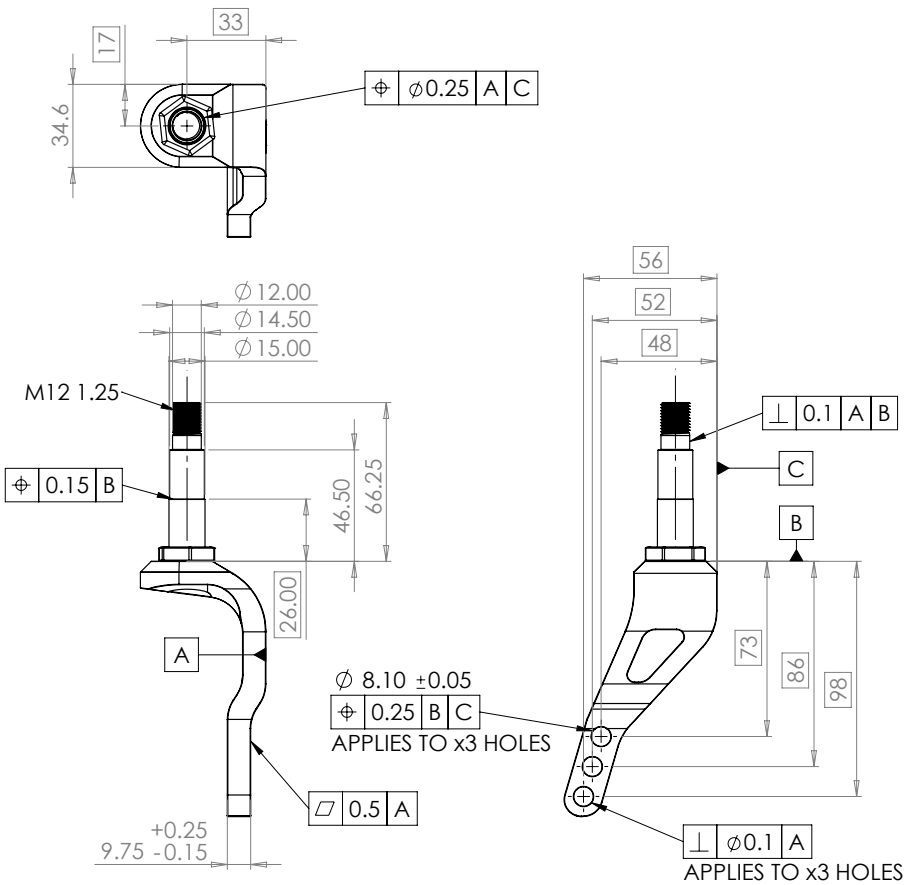

Design Enhancement

Developing and testing a new design of the component

Fierce competition in the market place drives innovation and pushes the limits of what is possible.

3D scanning and reverse engineering parts affords a level of analysis not accessible otherwise. Taking competitor designs and improving upon them accelerates your time to market and saves engineering resource.

Development & Testing

Parametric CAD data based off the 3D scan data allows the CAD models to be modified quickly to generate multiple iterations of a design. These can now be used for testing and prototyping to assess their performance.

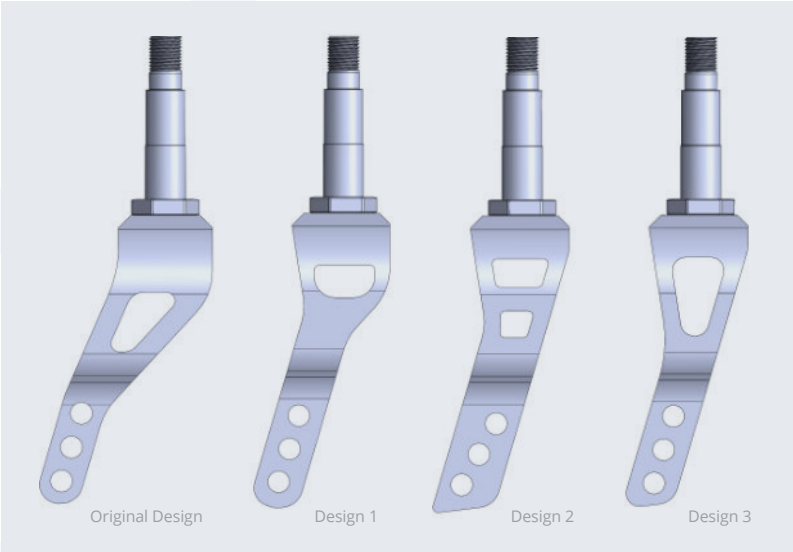

D1
Development

FEA/CFD Analysis

Computer simulation is vital for engineering teams, aiding in competitor design reviews, benchmarking new iterations, and gaining insight into part and assembly performance. Full reverse engineering for FEA/CFD analysis may not be required, as watertight scan data can suffice.

D2
Development

3D Printing & Prototyping

Prototyping is a key feature in the development loop. 3D printing has allowed this to happen faster, more frequently and earlier in the process. 3D printing new design developments is a vital step in validating the design and ensuring the design works as intended.

3D printing the wheel caster forks allows the design to be reviewed on it's performance, assembly and appearance.

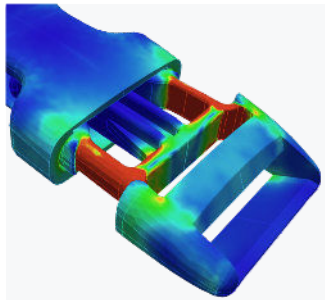

Examples

Using 3D scan data in computer analysis

- **FEA** simulation of the deformation resistance of a mounting bracket
- **CFD** simulation of the aerodynamic properties of a roof rack
- **Injection mould analysis** of how a cavity will fill spot weld lines and airtraps

Project 2

Wheelchair Frames

The wheelchair frame serves as the structural foundation and support system for a wheelchair. Engineers design wheelchair frames to be sturdy, lightweight, and customisable, considering factors such as chair agility to ensure optimal functionality.

We used 3D scanning on this project for:

- The generation of competitor reference data to design a new wheelchair frame from
- Reverse engineering of a frame to create new bent tube profiles from

3D Scanning and Metal Fabrication

3D scanning plays a crucial role in various aspects of metal fabrication, offering precise measurements, increased efficiency, and reduced errors.

Examples of how 3D scanning can be used in metal fabrication include:

- Verifying dimensional accuracy of a CNC-machined metal bracket by 3D scanning and comparing it to the original CAD model.
- Reverse engineering a vintage metal gear using 3D scanning to reproduce it accurately without original design data.
- Inspecting complex metal turbine blades with 3D scanning to identify surface defects and ensure quality standards.

3D Scanning

Creating reference data to work from

Tubular frame geometry is difficult to capture using manual methods and is prone human error. 3D scanning solves this, generating a reliable likeness of the frame design and hinging assemblies ready for analysis, reverse engineering or inspection.

Overlay Analysis

Overlaying both 3D scans, we can observe the geometry difference between the two frame designs.

This allows designers to specify:

- Best geometry for a specific purpose
- Optimal frame angles for agility or comfort
- Cost-down opportunities a manufacturer could make

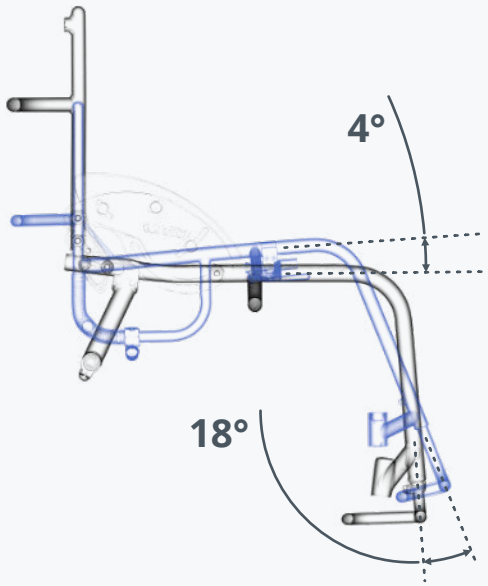

Reverse Engineering

Create new CAD data to manufacture new parts

Taking 3D scan data of the wheelchair frame in to reverse engineering software allows us to create an assembly of single tube sections that can be cut, bent and notched to detailed and precise CAD data. This is perfect for re-manufacturing old frame assemblies or creating a competitor benchmark frame to analyse.

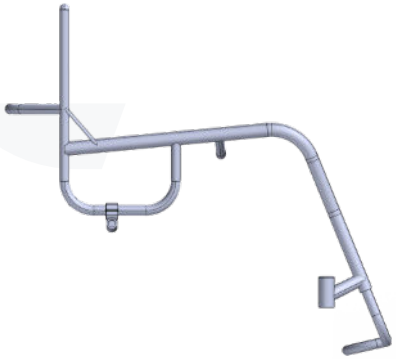

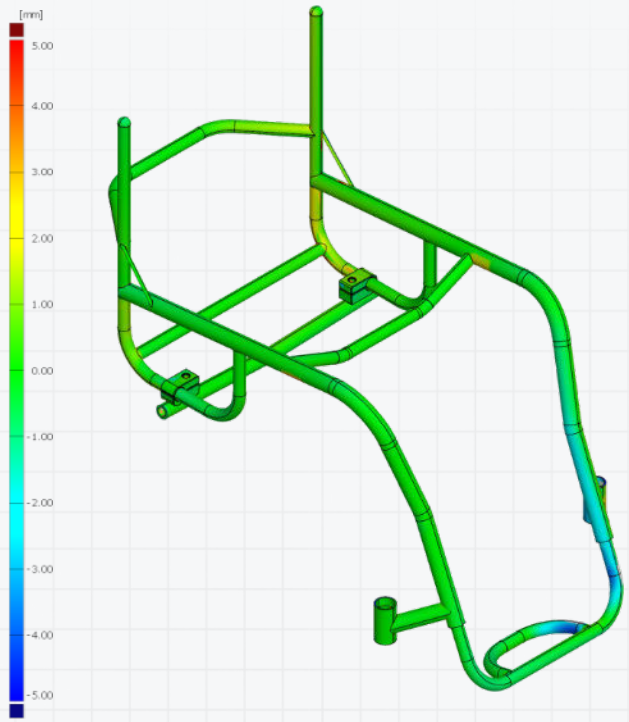

As with the previous project, with the brand-new parametric CAD data completed we conducted a deviance analysis. Setting the tolerance, we observed the majority of the part was within 0.5mm of the scan data.

Bonus: this analysis shows quality inconsistencies on the original frame assembly scan with some areas of the frame being asymmetrical.

3D Scanning | Reverse Engineering | Quality Analysis | 3D Services

Thank you.

We're Formeon

3D scanning experts with experience in a wide range of 3D disciplines from analysis to design. Our 3D scanning expertise ranges from inspection and validation to reverse engineering and observation.

Based in the Midlands and merging seamlessly with your design process to help you hit your ever-decreasing timelines. We are experts in digital data capture and 3D services.

We can travel nationally or scan at our north Birmingham studio.

Mike Rose
Formeon Founder
mike.rose@formeon.co.uk
(+44) 07438 640526